项 目 Item	参 数 Parameter
额定电流、电压 Rated voltage Rated current	6A 250V AC 10A 125V AC 10(6)A 250V AC
绝缘电阻 Insulated resistance	≥ 100M Ω
接触电阻 Contact resistance	≤ 50m Ω
介电强度(极间) Dielectric strength	1500VAC/5S
电器寿命 Endurance	≥ 10000 Cycles
使用温度 Ambient temperature	T 105/55
防护级别 Degree of protection	IP 55

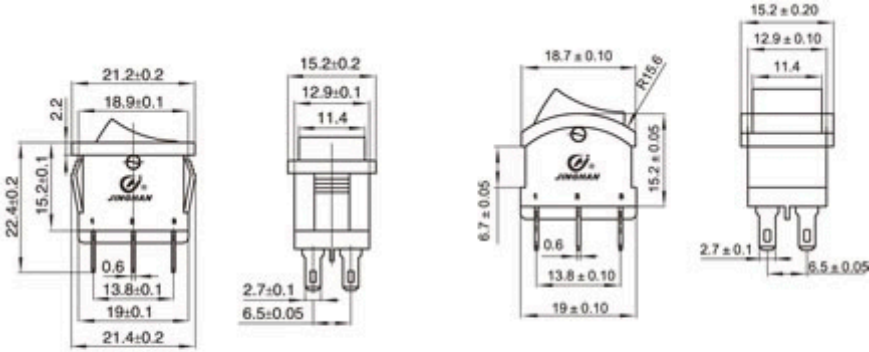

面板开孔
Panel Opening

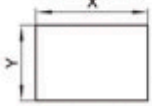

面板厚度 Panel thickness	$X^{+0.10}_{0}$	$Y^{+0.10}_{0}$
0.6–1.2	19	13
1.2–2	19.2	
2–3	19.4	

ORDER INFORMATION 订货标识

KCD2–202 K 4P A 1 K

基座类型 Base Type

- A — 202A
- R — 202R

基座颜色 Body Color

- K
- W
- Y
- R
- G
- O
- B

电路图 Circuit Diagram

- 4P — ON–OFF
- 6P — ON–ON
- D — ON–OFF–ON
- DV — (ON)-OFF-ON
- DW — (ON)-OFF-(ON)

端子规格 Terminal

- A — 7.2±0.1; 2.8 × 0.6
- B — 5.5±0.1; 2.8 × 0.6

开关标记 Making

- 0 空白 No Making
- 1 ○ —
- 2 ●
- 3 长 长
- 4 ○ |
- 5 OFF ON
- 6 客人要求

按钮颜色 Rocker Color

- K
- W
- Y
- R
- G
- O
- B